TECHNICAL DATASHEET

Reference: RAK12000-09*

Product: PRIME single lever basin mixer

***RAK12000-09**

Chrome Finish

***RAK12000-09.GD1**

Gold Color

Glossy Finish

***RAK12000-09.RG1**

Rose Gold Color

Glossy Finish

***RAK12000-09.BK1**

Black Color

Glossy Finish

Product Description:

single lever basin mixer DN 15
single hole mounted
solid lever
ceramic cartridge with hot water safety device
PCA cache aerator M16.5 x 1
flow level 1.0 gpm (3.8 ltr/min)#
flexible high pressure supply tubes 1/2 inch
rapid installation set
pop up waste 1 1/4 inch
in accordance to EN 817
Pressure Compensating Aerator 1.0 gpm (3.8 ltr/min)#

Line Drawing:

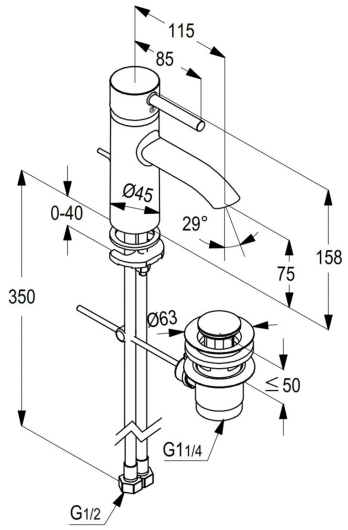

Advertisement:

* KLUDI RAK LLC item no. RAK12000-09 PRIME single lever basin mixer
* Chrome plated/PVD Gold/PVD Rose Gold/PVD Black brass, in accordance to EN 50930-6
* in accordance to EN 817
* ceramic cartridge K-35 with hot water safety device

single lever basin mixer, manufacturer KLUDI RAK LLC, KLUDI RAK PRIME item no. RAK12000-09, type: single lever basin mixer, DN 15/PN 10, Chrome plated/PVD Gold/PVD Rose Gold/PVD Black brass, solid lever, Chrome plated/PVD Gold/PVD Rose Gold/PVD Black metal, ceramic cartridge K-35 with hot water safety device, PCA cache aerator M16.5 x 1, flow level 1.0 gpm (3.8 ltr/min), flexible high pressure supply tubes 1/2 inch, with DVGW/KIWA/WRAS/CSTBAT approval, rapid installation set, with pop up waste 1 1/4 inch, dimensions: height 158 mm, nozzle height 75 mm, nozzle projection 115 mm, lever projection 85 mm

Water Flow Rate#:

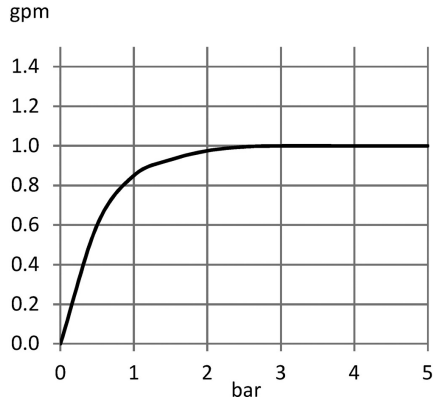

 # variation: ± 15%

RAK12000-09 online

KLUDI RAK

" We Stand for Water Saving "