TECHNICAL DATASHEET

Reference: RAK13002-87*

Product: PASSION single lever bath and shower mixer

***RAK13002-87**

Chrome Finish

***RAK13002-87.GD1**

Gold Color

Glossy Finish

***RAK13002-87.RG1**

Rose Gold Color

Glossy Finish

***RAK13002-87.BK1**

Black Color

Glossy Finish

Product Description:

solid lever
wall fastening
aerator M24 x 1
ceramic cartridge with hot water safety device
protected against backflow
shower outlet 1/2 inch
automatic diverter shower to bath tub
S-unions 1/2 inch x 3/4 inch
flow regulator 8 ltr/min#

Line Drawing:

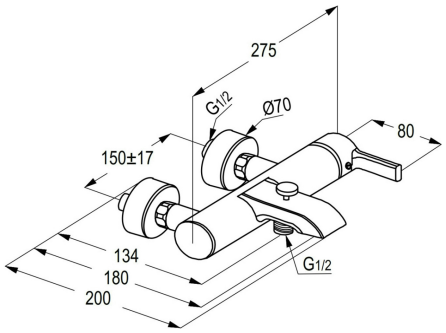

Water Flow Rate#:

 # variation: ± 15%

Advertisement:

* KLUDI RAK LLC item no. RAK13002-87
* Chrome plated/PVD Gold/PVD Rose Gold/PVD Black brass, in accordance to EN 50930-6
* in accordance to EN 817
* ceramic cartridge with hot water safety device Ø 41 mm

single lever bath and shower mixer, wall fastening, manufacturer KLUDI RAK LLC item no. RAK13002-87, DN 15, Chrome plated/PVD Gold/PVD Rose Gold/PVD Black brass, solid lever, ceramic cartridge with hot water safety device Ø 41 mm, type: single lever bath and shower mixer DN 15, aerator M24 x 1, protected against backflow, EN 1717, lever projection 80 mm, nozzle projection 180 mm, projection 200 mm, breadth 275 mm, shower connection 1/2 inch, flow regulator 8 ltr/min, S-unions 1/2 inch x 3/4 inch, automatic diverter shower to bath tub, for pressure type water heater, continuous line heater, PN 10