TECHNICAL DATASHEET

Reference: RAK13005-87*

Product: PASSION single lever shower mixer

***RAK13005-87**

Chrome Finish

***RAK13005-87.GD1**

Gold Color

Glossy Finish

***RAK13005-87.RG1**

Rose Gold Color

Glossy Finish

***RAK13005-87.BK1**

Black Color

Glossy Finish

Product Description:

single lever shower mixer DN 15
wall fastening
solid lever
flow regulator 8.0 ltr/min#
ceramic cartridge with hot water safety device
shower connection 1/2 inch
protected against backflow
S-unions 1/2 inch x 3/4 inch
in accordance to EN 817

Line Drawing:

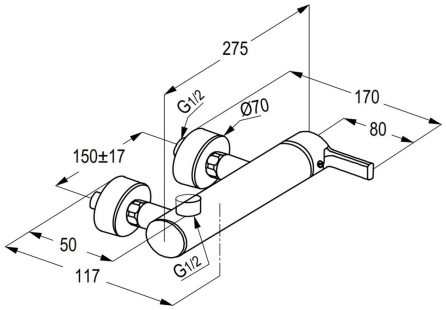

Water Flow Rate#:

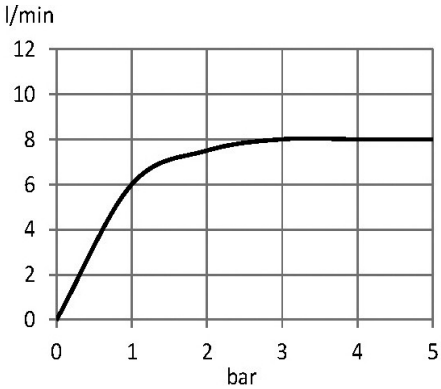

 # variation: ± 15%

Advertisement:

* KLUDI RAK LLC item no. RAK13005-87 PASSION single lever shower mixer
* Chrome plated/PVD Gold/PVD Rose Gold/PVD Black brass, in accordance to EN 50930-6
* in accordance to EN 817, EN 1717
* ceramic cartridge K-41 with hot water safety device

single lever shower mixer, manufacturer KLUDI RAK LLC, KLUDI RAK PASSION item no. RAK13005-87, type: single lever shower mixer, DN 15/PN 10, Chrome plated/PVD Gold/PVD Rose Gold/PVD Black brass, solid lever, Chrome plated/PVD Gold/PVD Rose Gold/PVD Black metal, ceramic cartridge K-41 with hot water safety device, protected against backflow, EN 1717, wall fastening, shower connection 1/2 inch, with flow regulator 8.0 ltr/min, S-unions 1/2 inch x 3/4 inch, dimensions: projection 117 mm, projection shower connection 50 mm, lever projection 80 mm