TECHNICAL DATASHEET

***RAK14161-09**

Chrome Finish

Reference: RAK14161-09*

Product: PROFILE STAR single lever high-raised XL basin mixer

***RAK14161-09.GD1**

Gold Color

Glossy Finish

***RAK14161-09.RG1**

Rose Gold Color

Glossy Finish

***RAK14161-09.BK1**

Black Color

Glossy Finish

Product Description:

single lever basin mixer XL HR DN 15
single hole mounted
solid lever
ceramic cartridge with hot water safety device
aerator M24 x 1
flow rate 3.8 ltr/min#
flexible high pressure supply tubes 1/2 inch
rapid installation set
noise group I
in accordance to EN 817
Pressure Compensating Aerator 3.8 ltr/min#

Advertisement:

* KLUDI RAK LLC item no. RAK14161-09 PROFILE STAR single lever basin mixer XL
* Chrome plated/PVD Gold/PVD Rose Gold/PVD Black brass, in accordance to EN 50930-6
* in accordance to EN 817
* ceramic cartridge K-35 with hot water safety device

single lever basin mixer, manufacturer KLUDI RAK LLC, KLUDI RAK PROFILE STAR XL HR item no. RAK14161-09, type: single lever basin mixer, DN 15/PN 10, Chrome plated/PVD Gold/PVD Rose Gold/PVD Black brass, solid lever, Chrome plated/PVD Gold/PVD Rose Gold/PVD Black metal, ceramic cartridge K-35, with hot water safety device, noise level DIN 4109 group I, without report no., aerator M24 x 1, flow class 3.8 ltr/min, flexible high pressure supply tubes 1/2 inch, with DVGW/KIWA/WRAS/CSTBAT approval, rapid installation set, dimensions: height 350 mm, nozzle height 280 mm, nozzle projection 130 mm, lever projection 85 mm

Line Drawing:

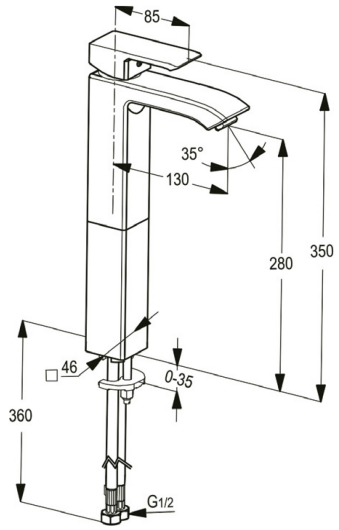

Water Flow Rate#:

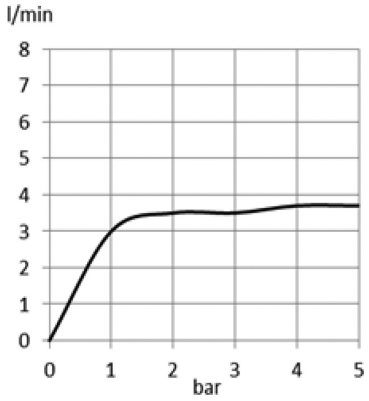

 # variation: ± 15%

RAK14161-09 online

KLUDI RAK

" We Stand for Water Saving "