TECHNICAL DATASHEET

Reference: RAK17050-09*

Product: PEARL single lever sink mixer

***RAK17050-09**

Chrome Finish

***RAK17050-09.GD1**

Gold Color

Glossy Finish

***RAK17050-09.RG1**

Rose Gold Color

Glossy Finish

***RAK17050-09.BK1**

Black Color

Glossy Finish

Product Description:

solid lever
single hole mounted
flow rate 3.8 ltr/min#
aerator M22 x 1
ceramic cartridge with hot water safety device 35 mm
swivel U spout
flexible high pressure supply tubes 1/2 inch
rapid installation set
in accordance to EN 817
Pressure Compensating Aerator 3.8 ltr/min (1 gpm)#

Advertisement:

* KLUDI RAK LLC item no. RAK17050-09
* Chrome plated/PVD Gold/PVD Rose Gold/PVD Black brass, in accordance to EN 50930-6
* in accordance to EN 817
* ceramic cartridge with hot water safety device Ø 35 mm

single lever sink mixer, manufacturer KLUDI RAK LLC item no. RAK17050-09, DN 15, Chrome plated/PVD Gold/PVD Rose Gold/PVD Black brass, type: single lever sink mixer, solid lever, with swivel U spout, with aerator M22 x 1, noise level DIN EN 4109 group I, report no. P-IX, flow rate 3.8 ltr/min, ceramic cartridge with hot water safety device Ø 35 mm, flexible high pressure supply tubes 1/2 inch, with DVGW/KIWA/WRAS approved, with metal body length 350 mm, lever projection 90 mm, nozzle projection 160 mm, overall height 310 mm, nozzle height 225/310 mm, for borehole diameter minimum 32 mm, rapid installation set, for pressure type water heater, continuous line heater, PN 10

Line Drawing:

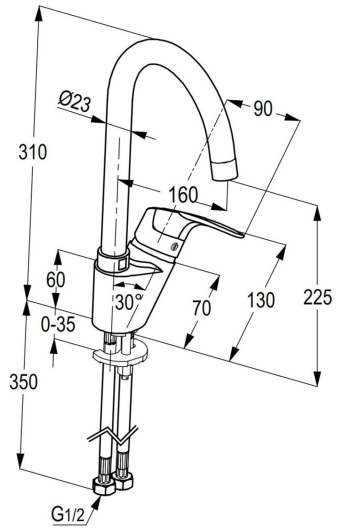

Water Flow Rate#:

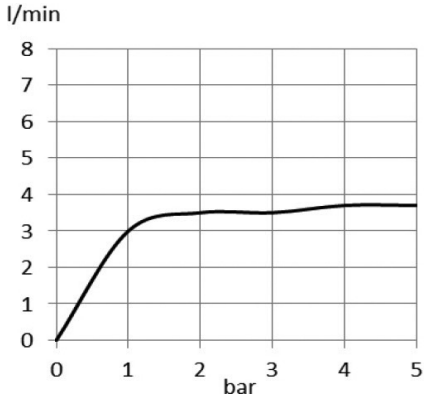

 # variation: ± 15%

RAK17050-09 online

1/6/2021

KLUDI RAK

" We Stand for Water Saving "